TJL25

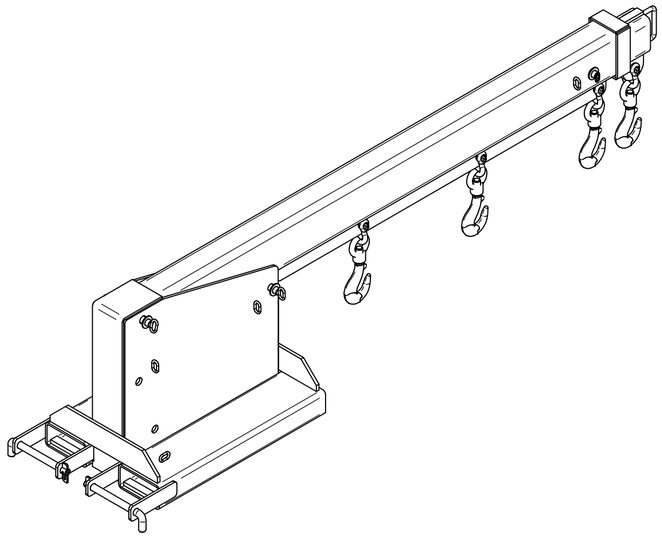




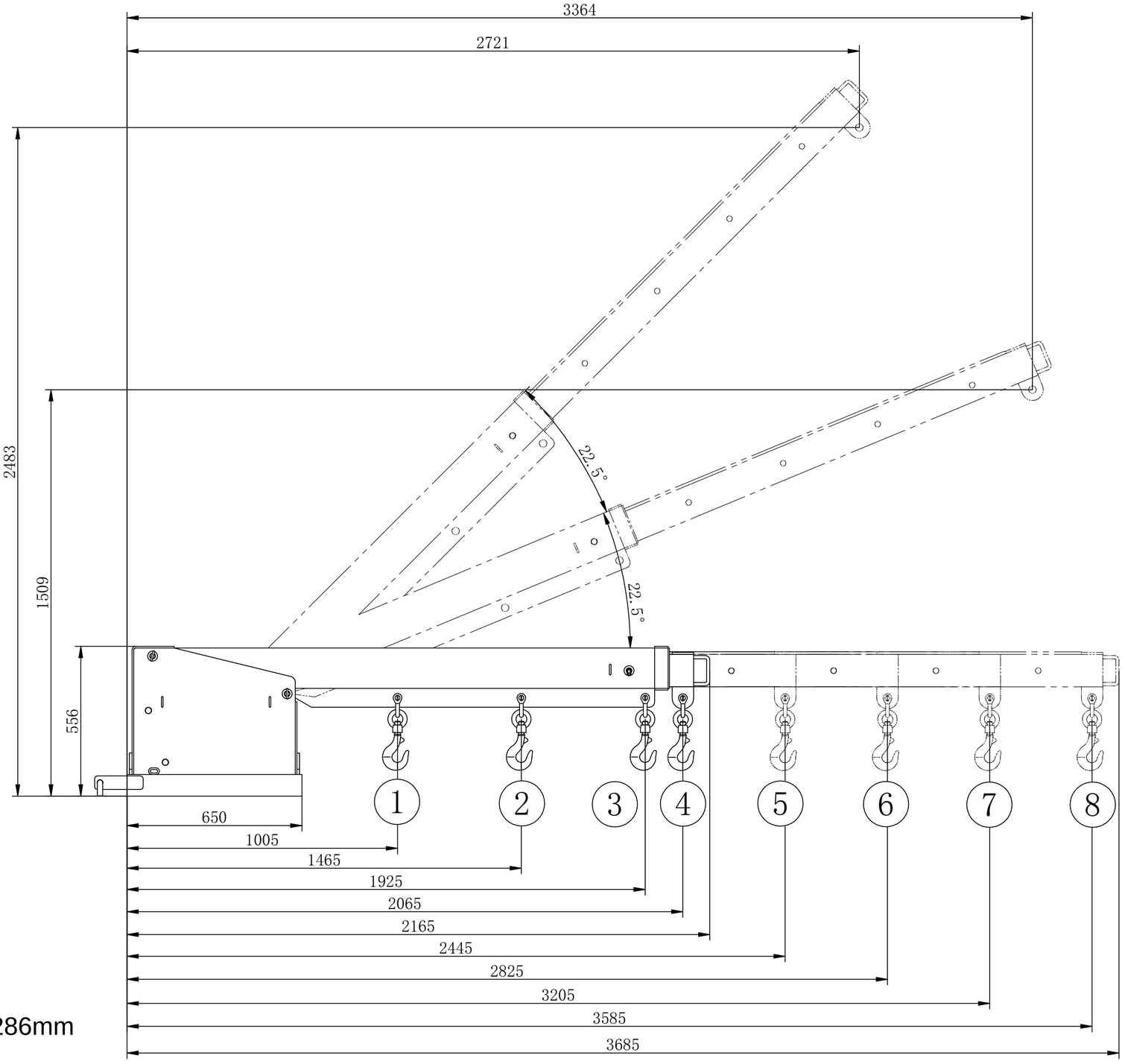


SWL(max): 2500kg
Extension range: 1005-3585mm
Inner size of the fork sleeve: 145x55mm
Distance between the fork sleeve centers: 286mm
Weight: 190kg

| SAFE WORKING LOADS (SWL) PER POSTION | | | | | | | | |
|---|---|---|---|---|---|---|---|---|
| POSITION | 1 | 2 | 3 | 4 | 5 | 6 | 7 | 8 |
| EXTENSION(mm) | 1005 | 1465 | 1925 | 2065 | 2445 | 2825 | 3205 | 3585 |
| SWL(kg) | 2500 | 2500 | 1900 | 1650 | 1250 | 650 | 380 | 240 |